Clippers.

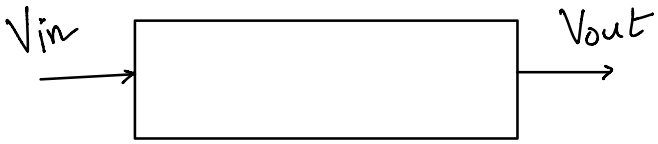

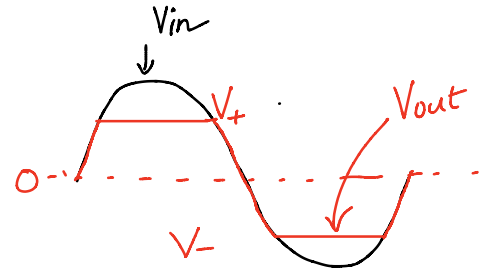

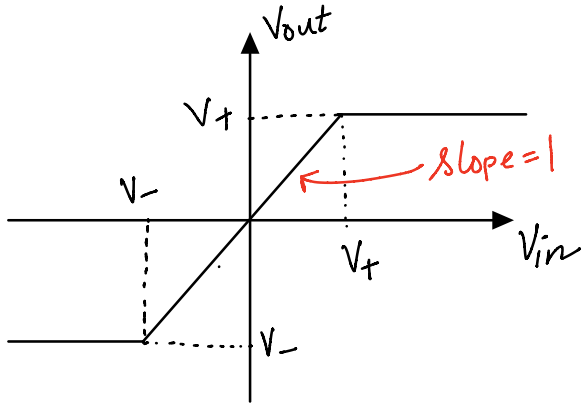

Upper Clipper

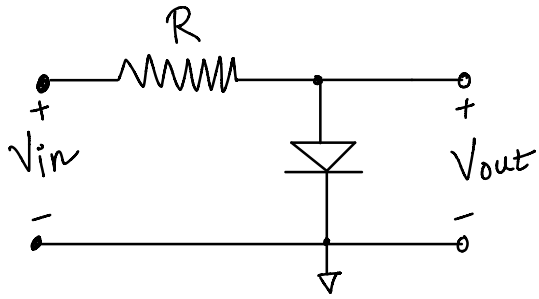

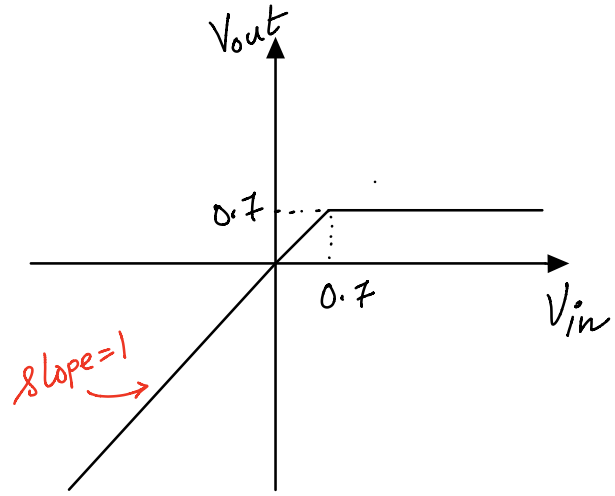

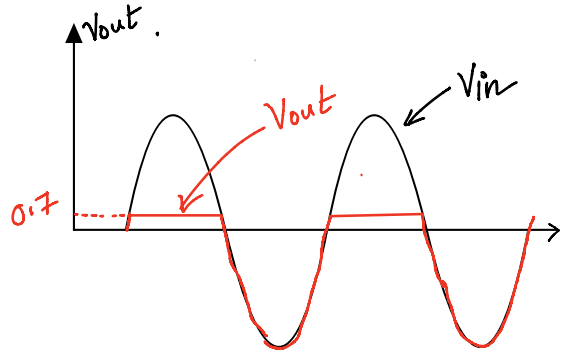

Lower Clipper

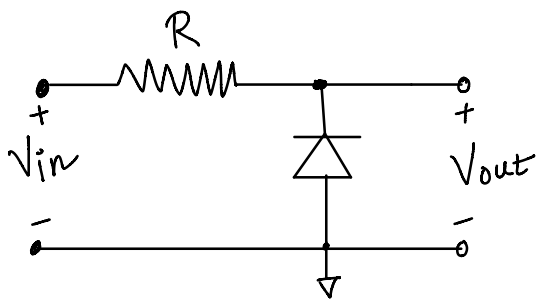

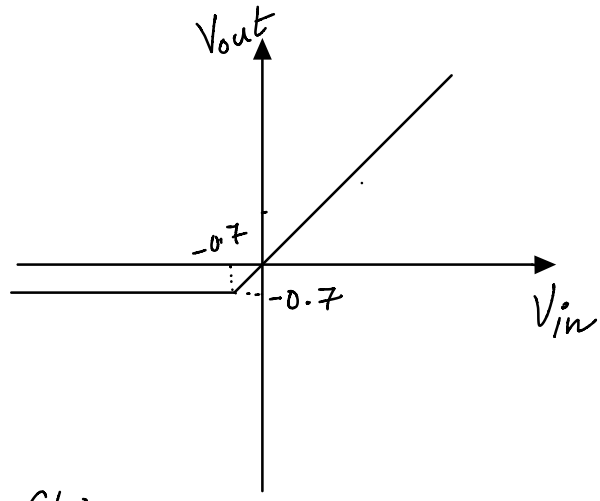

Combined lower and Upper Clipper

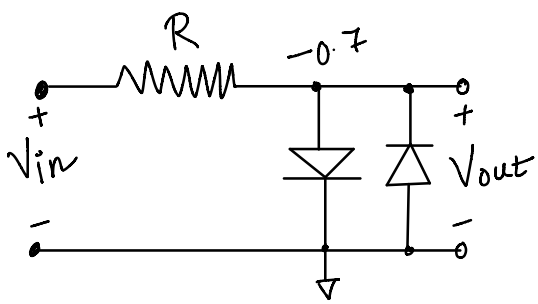

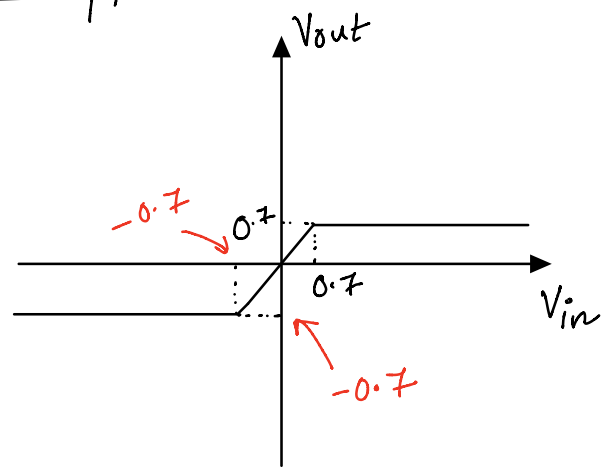

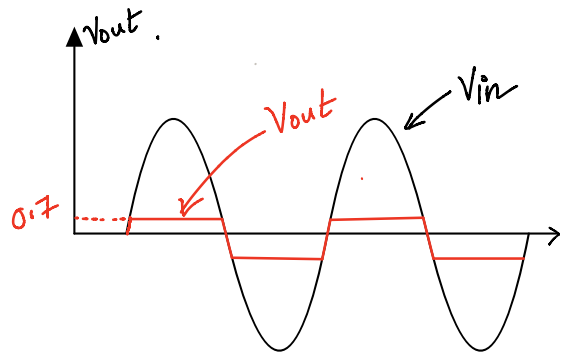

Upper Clipper with Offset

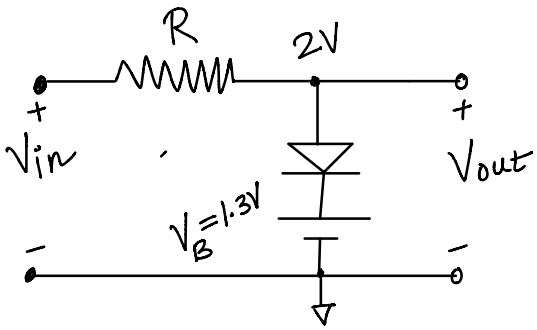

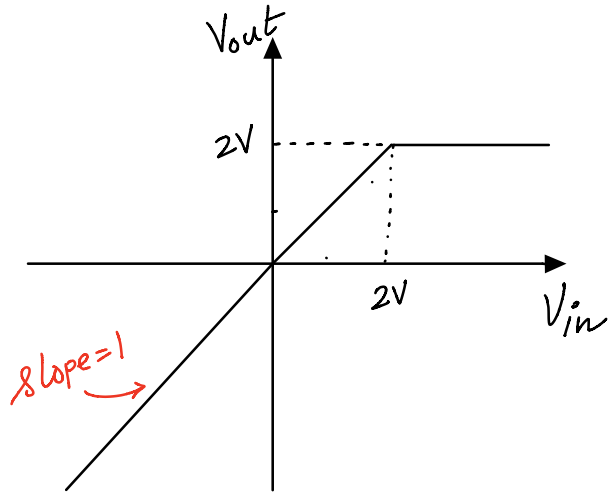

Combined Upper and lower Clipper with Offset

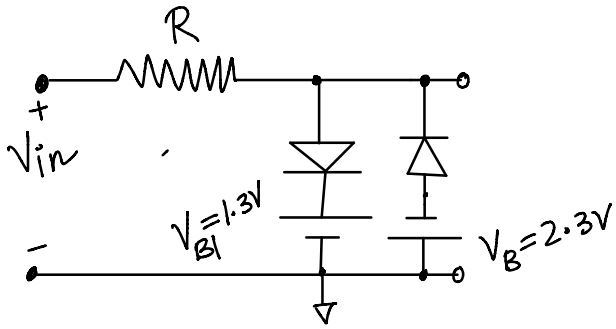

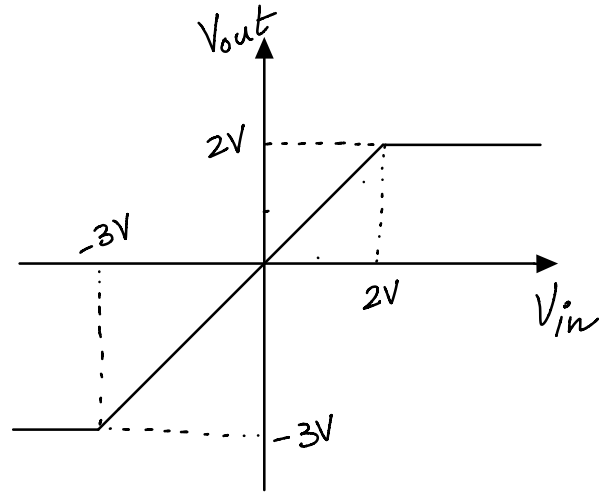

Clamper Circuits

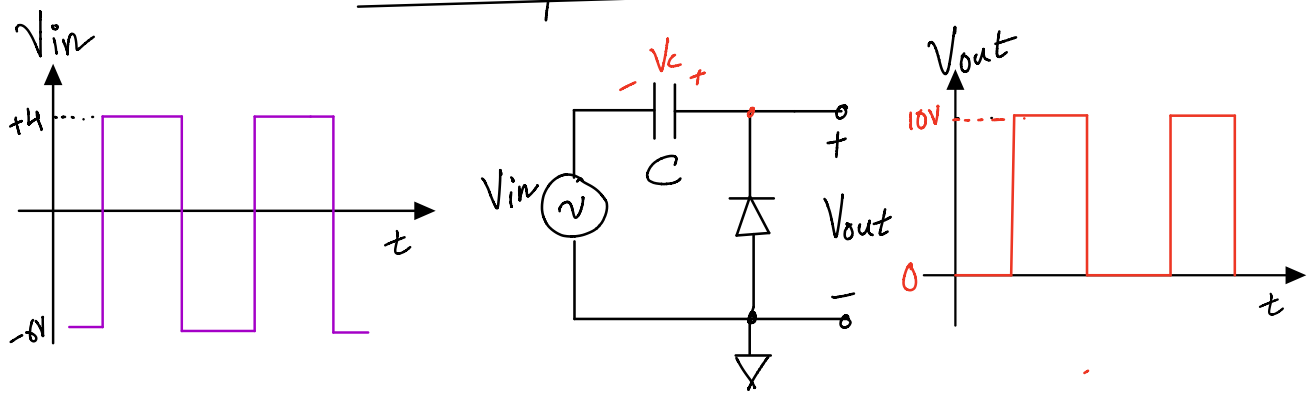

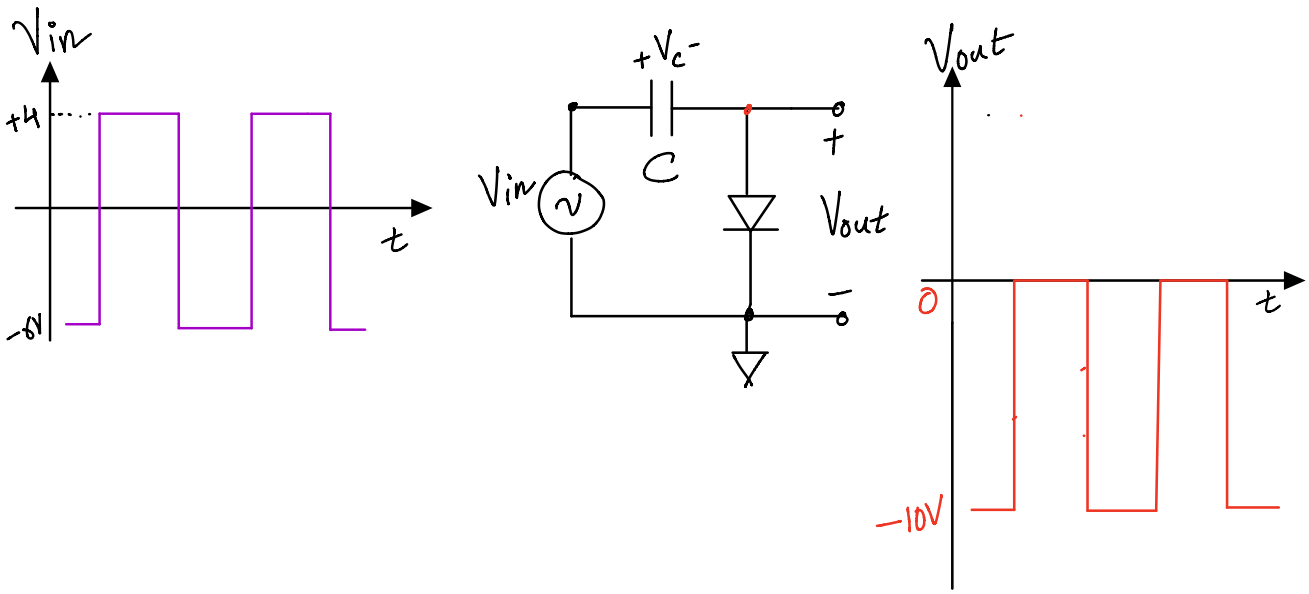

Clampers with Offset

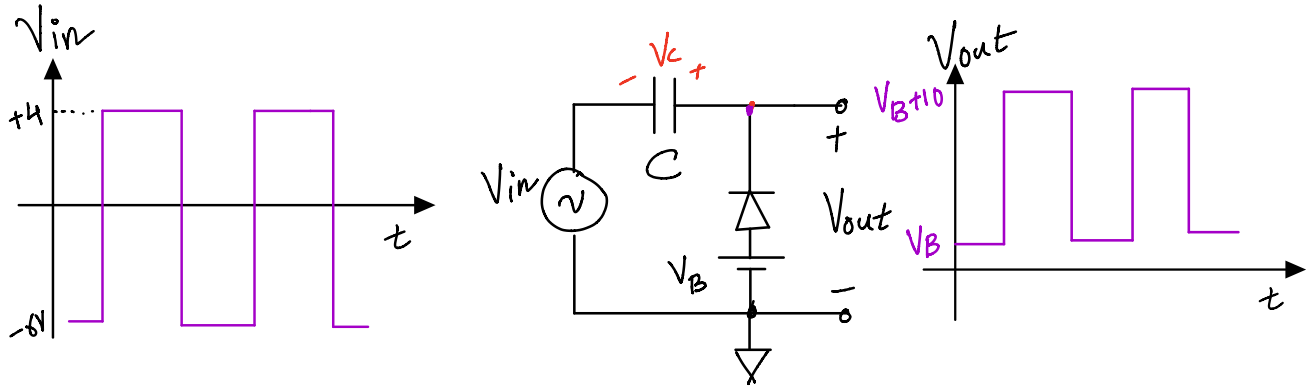
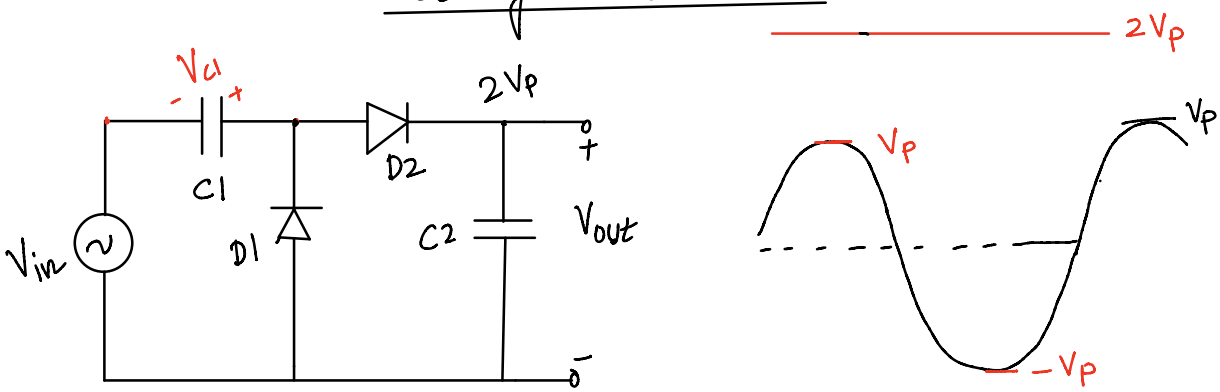
Voltage Doubler